Universal Mobile Telecommunications System (UMTS)

Part I: Evolution from GPRS to UMTS

Introduction (1/2)

- *Universal Mobile Telecommunications System* (UMTS) is a third generation mobile network evolved from the second generation systems, GSM and *General Packet Radio Service*(GPRS).

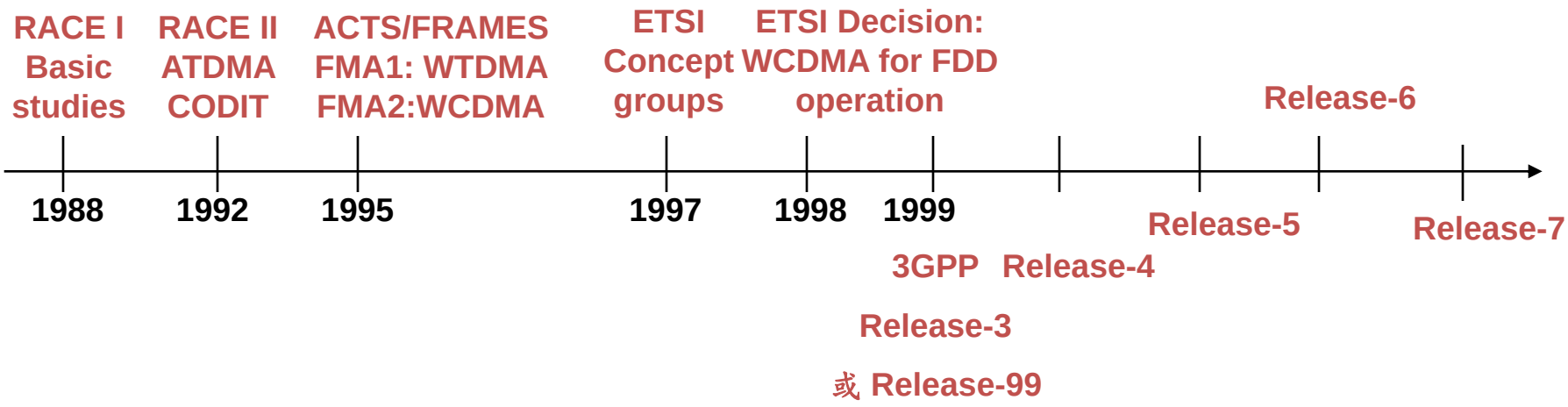

Introduction (2/2)

- In this lecture, we consider the core network evolution path from GSM/GPRS to UMTS.
- The *Core Network* (CN) consists of two service domains, a *circuit-switched* (CS) service domain (i.e., PSTN/ISDN) and a *packet-switched* (PS) service domain (i.e., IP).
- In the CS domain, an *Mobile Station* (MS) is identified by IMSI and TMSI. In the PS domain, an MS is identified by IMSI and P-TMSI.

GSM/GPRS/UMTS

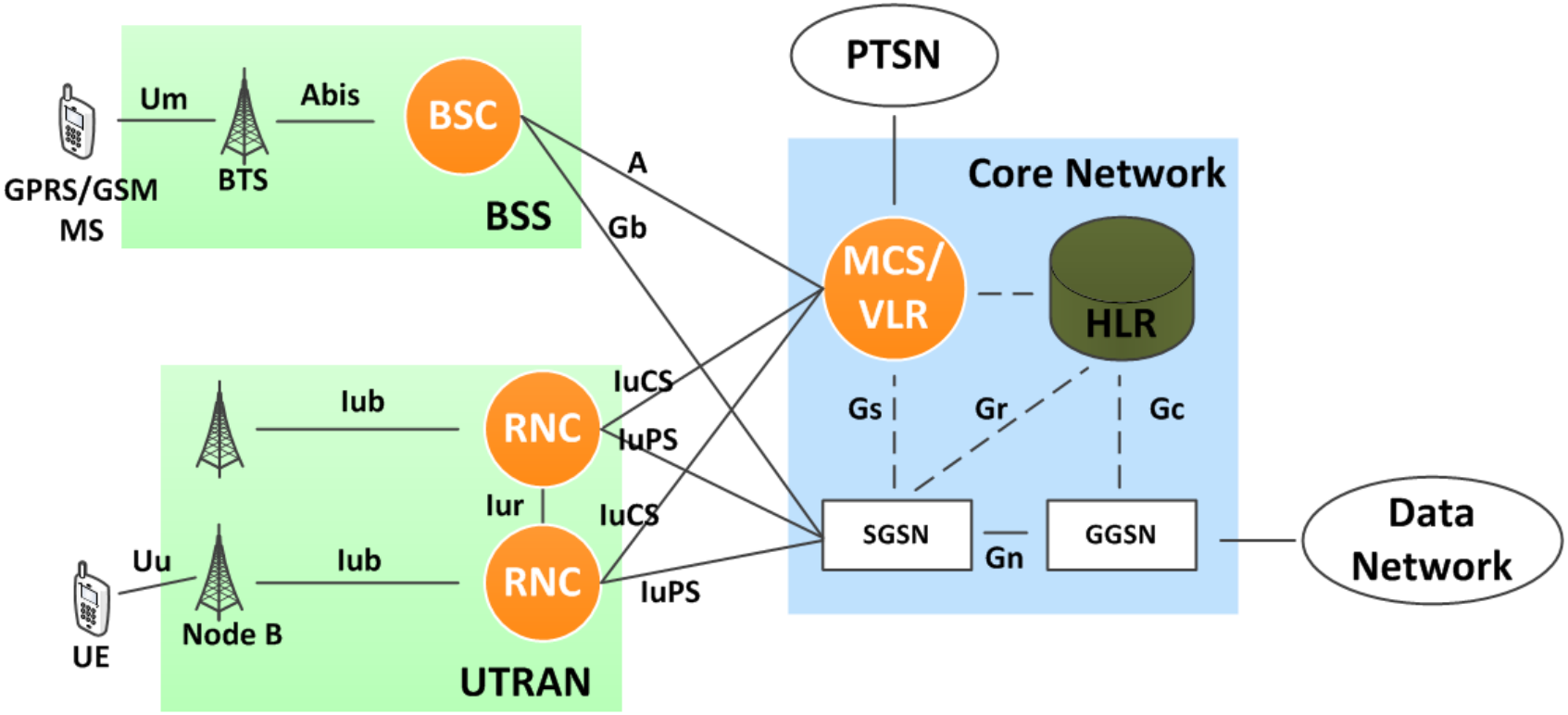

Note that the dashed lines represent signaling links, and the solid lines represent data and signaling links.

GPRS Network

- To be simplified, GPRS is evolved from GSM by introducing two new core network nodes *Serving GPRS Support Node* (SGSN) and *Gateway GPRS Support Node* (GGSN).
- Existing GSM nodes (BSS, MSC/VLR, and HLR) are upgraded.
- GPRS BSS consists of *Base Transceiver Station* (BTS) and *Base Station Controller* (BSC) where the BSC is connected to the SGSN through frame relay link.
- The BTS communicates with the MS through the radio interface *Um* based on the TDMA technology.
- Three operation modes are defined for GPRS MS:
  - *Class A* MS allows simultaneous CS and PS connections.
  - *Class B* MS provides automatic choice of CS or PS connection, but only one at a time.
  - *Class C* MS only supports PS connection.

UMTS Network

- UMTS is evolved from GPRS by replacing the radio access network.
- The UTRAN *(UMTS Terrestrial Radio Access Networ*k) consists of *Node* Bs (the 3G term for BTS) and *Radio Network Controllers* (RNCs) connected by an ATM network.
- The RNC and the Node B serving an MS are called the *Serving Radio Network System* (SRNS).
- In UMTS, every Node B is connected to an RNC through the *Iub* interface.
- Every RNC is connected to an SGSN through the *IuPS* interface, and to an MSC through the *IuCS* interface.
- An RNC may connect to several RNCs through the *Iur* interface.
- Unlike RNCs in UMTS, the BSCs in GPRS/GSM do not connect to each other.
- The IuCS, IuPS, Iub, and Iur interfaces are implemented on the ATM network.

UMTS User Equipment

- The *User Equipment* (UE; the 3G term for MS) connects with Node Bs through the radio interface *Uu* based on the WCDMA (Wideband CDMA) technology.

- Three operation modes are defined for UMTS UE:
  - *PS/CS mode* UE is equivalent to GPRS Class A MS.
  - *PS mode* UE is equivalent to GPRS Class C MS.
  - *CS mode* UE can only attach to the CS domain.

Core Network Evolution

- In terms of the core network evolution from GPRS to UMTS, both SGSN and MSC need to be modified.
- Other core network nodes such as HLR (specifically, HLR packet domain subscription data), VLR (specifically, VLR and SGSN association), and GGSN (specifically, PDP contexts) are basically the same.
- The SGSN and the MS are modified (specifically MM and PDP contexts and the related procedures).

Control Planes for UMTS and GPRS (1/3)

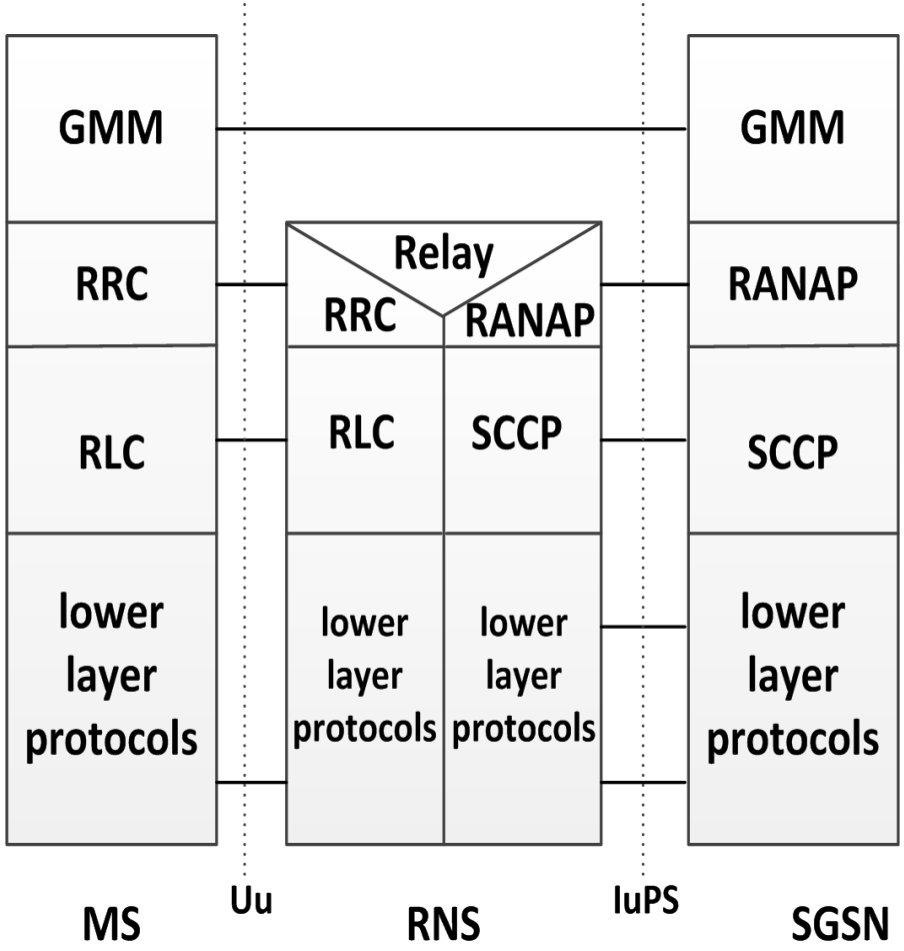

(a) Control plane for UMTS Mobility Management

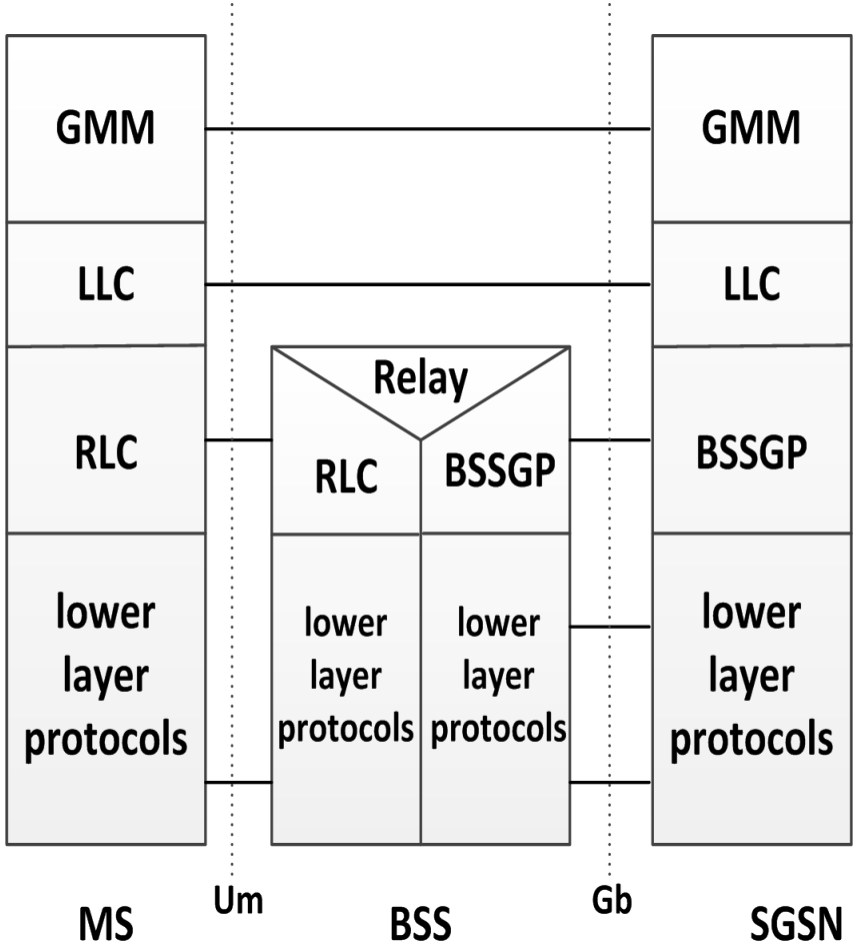

(b) Control Plane for GPRS Mobility Management

Control Planes for UMTS and GPRS (2/3)

- Unlike GPRS, the LLC layer is not supported in UMTS. In GPRS, reliable communication between MS and SGSN is guaranteed by LLC.
- In UMTS, *Radio Resource Control* (RRC) protocol is responsible for reliable connection between MS and UTRAN, and *Signaling Connection Control Part* (SCCP) is responsible for reliable connection between UTRAN and SGSN.
- Specifically, radio resources are managed by RRC exercised between the MS and the UTRAN.

Control Planes for UMTS and GPRS (3/3)

- On top of SCCP, the *Radio Access Network Application Part* (RANAP) protocol supports transparent mobility management signaling transfer between the MS and the CN which are not interpreted by the UTRAN.
- RANAP is also responsible for serving RNC relocation, *radio access bearer* (RAB) management, and so on.
- In both GPRS and UMTS the *GPRS Mobility Management* (GMM) protocol supports mobility management functionality, which is the focus of this paper. In 3GPP 23.121, GMM for UMTS is also referred to as *UMTS MM* (UMM).

Mobility Management (MM) Messaging

- The mobility management (MM) messages are exchanged among GPRS/UMTS nodes through various interfaces described in two aspects:
  - Between the MS and the SGSN
  - Between the SGSN and Core Network Nodes (HLR, VLR, GGSN)

MM Messaging between MS and SGSN

- In GPRS, the mobility management (MM) messages are delivered through the Gb and the Um interfaces.
  - Specifically, an LLC link provides signaling connection between the MS and the SGSN in GPRS.
- In UMTS, the MM message transmission is performed through the Iu and the Uu interfaces.
  - In UMTS, the signaling connection consists of an RRC connection between the MS and UTRAN, and an Iu connection (“ one RANAP instance”) between the UTRAN and the SGSN.

MM Messaging between SGSN and Other CN Nodes

- In both GPRS and UMTS, GSM *Mobile Application Part* (MAP) is used to interface SGSN and the GSM nodes.
  - For example, Gr for HLR and Gs (the BSSAP+ protocol or *BSS Application Protocol +*) for MSC/VLR. SGSNs and GGSNs communicate by using the *GPRS Tunneling Protocol* (GTP) through the Gn interface.
  - Specifically, a *GTP tunnel* is established between two GPRS nodes to deliver the packets. This tunnel is identified by a *tunnel endpoint identifier* (TEID), an IP address and a UDP port number.

The Gs Interface (1/2)

- The Gs interface merits further discussion.
  - In GPRS and UMTS (Release 99), procedures such as attach, paging and location update are defined separately for CS and PS.
  - For example, LA update is performed for CS and RA update is performed for PS.
  - To save radio resources, execution of similar procedures for both CS and PS can be combined. Examples are combined PS/CS attach and combined RA/LA update.
  - Furthermore, activities such as CS paging can be performed by using the PS mechanism, so that the MS only needs to monitor single paging channel.
  - The above optimizations are achieved only if the Gs interface exists so that SGSN and MSC/VLR can communicate to combine the PS and CS activities.

The Gs Interface (2/2)

- The GPRS (UMTS) network is in *Network Mode Ⅰ* if the Gs Interface exists. Otherwise, it is in *Network Mode Ⅱ*. Note that an extra network mode(Mode Ⅲ)is defined for GPRS when the Gs is not present. This network mode has been removed from UMTS.
- Initiated by SGSN, a Gs association can be created between SGSN and MSC/VLR by storing the SGSN number in the VLR and storing the VLR number in the SGSN.
- With this association, messages regarding CS activities can be passed between the VLR and the SGSN.

User Plane (1/2)

- Protocols for user data transmission are defined in the *user plane*.
  - In GPRS, the *SubNetwork Dependent Convergence Protocol* (SNDCP) carries out transmission of NPDUs *(Network Packet Data Units*) on top of the LLC link between the MS and the SGSN.
  - In UMTS, the *Packet Data Convergence Protocol* (PDCP) carries out NPDU transmission on top of the RLC connection between the MS and the UTRAN, and the GTP-U (GTP for the user plane) protocol carries out transmission of NPDUs on top of the UDP/IP link (Iu link).
  - Packets of user data transmission may be lost when some MM signaling procedures are executed.

User Plane (1/2)

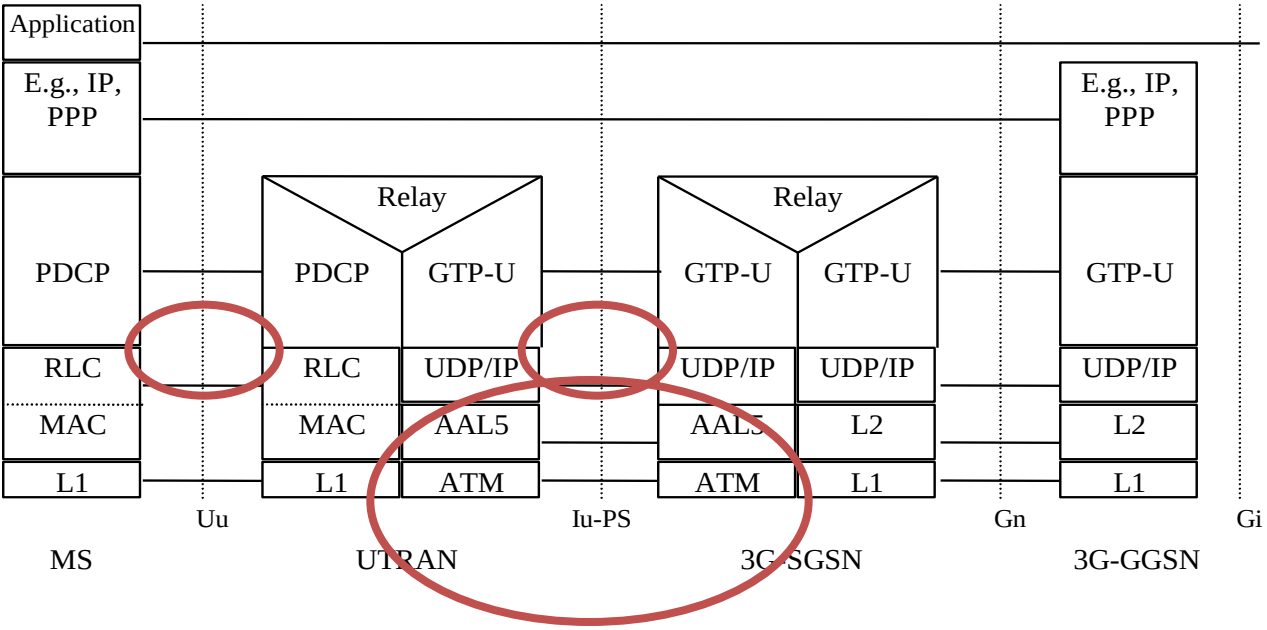

(a) User plane for UMTS

UTRAN改用IP over ATM, 因此上層可用GTP-U封裝上層IP封包

UE與UTRAN間則用PDCP封裝上層IP封包

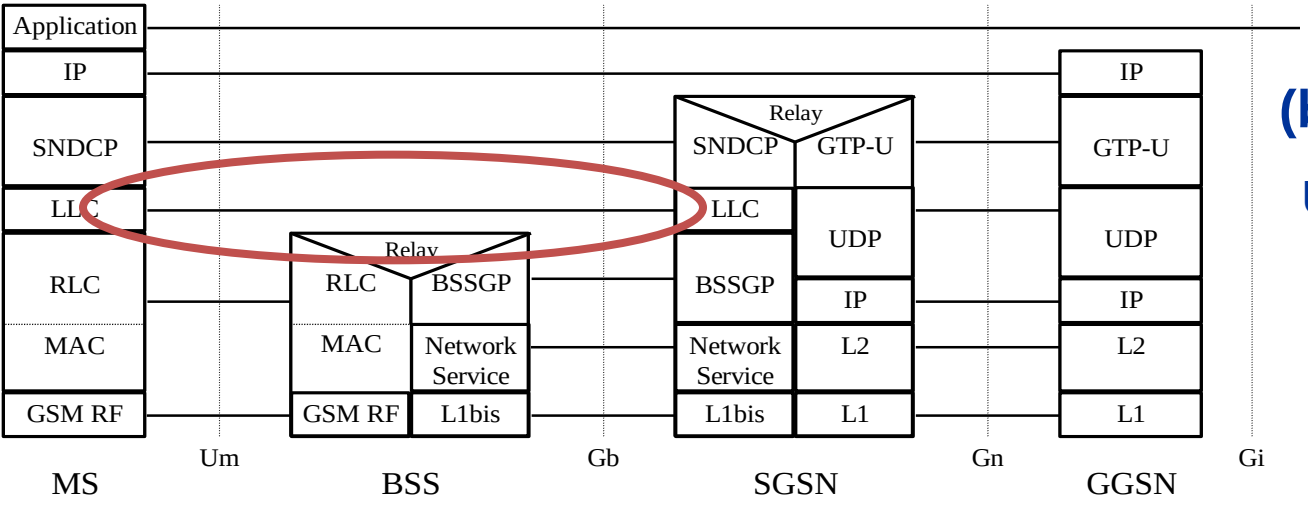

(b) User Plane for GPRS

UE與SGSN間, 在LLC上用SNDCP封裝上層IP封包

Summary: GPRS and UMTS Architecture

- In both GPRS and UMTS, IMSI is used as the common user Identity, and common MAP signaling is applied to both systems as well as GSM.
- Unlike GPRS, UMTS Radio network parameters and radio resources are managed in the UTRAN.
- Link GPRS BSS, the UTRAN does not coordinate MM procedures that are logically between the MS and CN.

Part II: UMTS Mobility Management

Concepts of MM

- In order to track the MSs, the cells (i.e., BTSs/Node Bs) in GPRS /UMTS service area are partitioned into several groups. To deliver services to an MS, the cells in the group covering the MS will page the MS to establish the radio link.
- In the CS domain, cells are partitioned into *location areas* (LAs). The LA of an MS is tracked by the VLR.
- In the PS domain, the cells are partitioned into *routing areas* (RAs). An RA is typically a subset of an LA. The RA of an MS is tracked by the SGSN.
- In GPRS, the SGSN also tracks the cell of an MS in PS connection (i.e., when packets are delivered between the MS and the SGSN).
- In UMTS, the cells in an RA are further partitioned into *UTRAN RAs* (URAs). The URA and the cell of an MS are tracked by the UTRAN.

LAs, RAs, and URAs

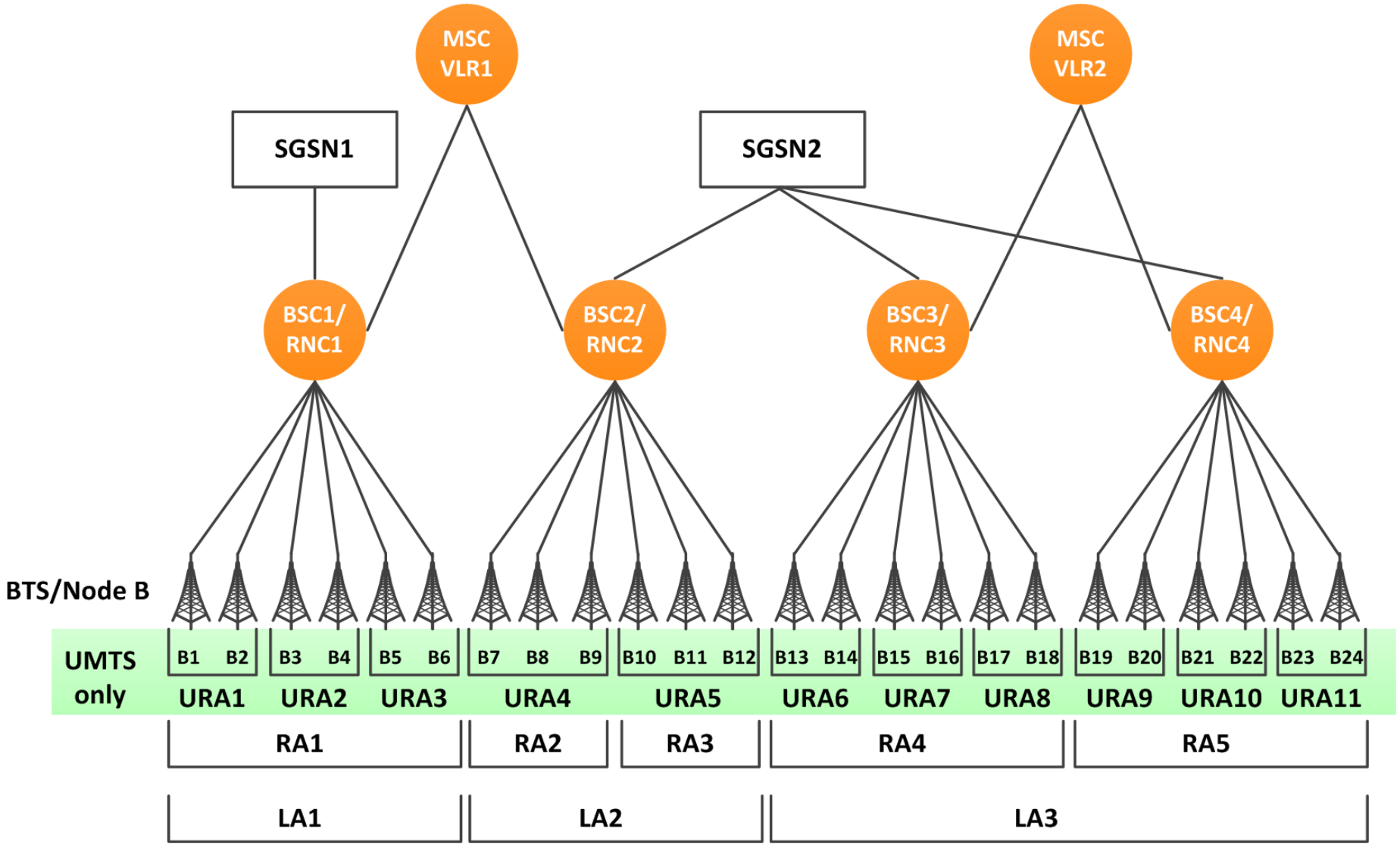

Areas Tracked by the Network Nodes

- The areas controlled by VLR, SGSN, and UTRAN are listed below:

	MSC/VLR			SGSN		UTRAN
	GPRS		UMTS	GRPS	UMTS	UMTS
Cell	no	no	no	yes	no	yes
URA	-	-	no	-	no	yes
RA	-	no	no	yes	yes	no
LA	yes	yes	yes	no	no	no

UTRAN Tracking

- In UMTS, the UTRAN tracking is triggered by the establishment of the RRC connection. In the MS and the UTRAN, an RRC state machine is executed.

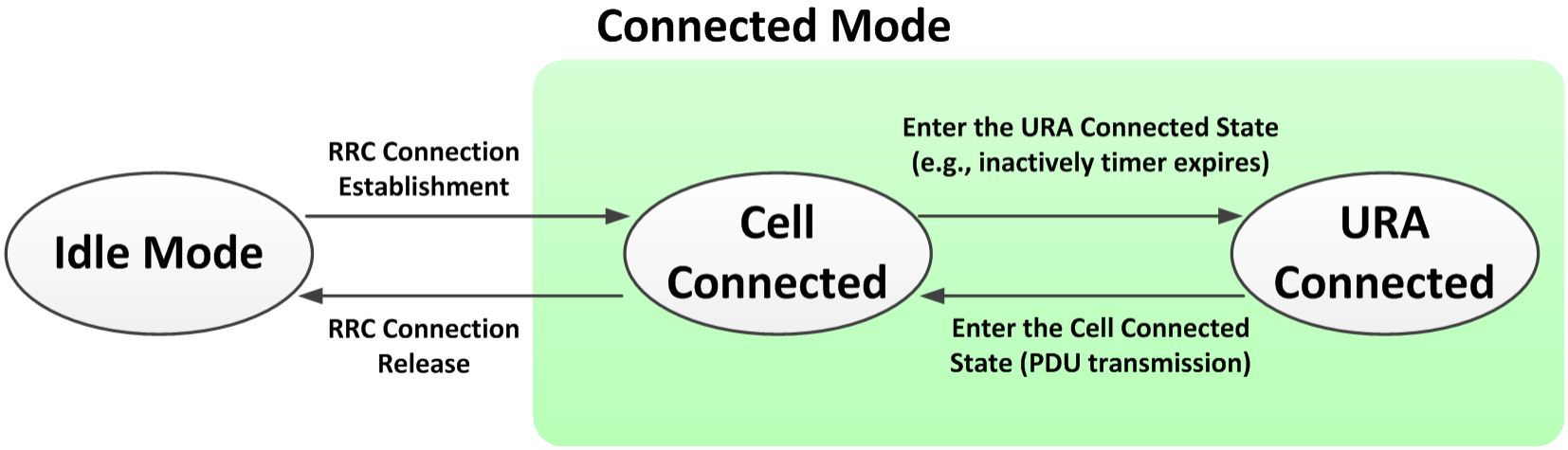

  - In the RRC Idle mode, no RRC connection is established, and the MS is tracked by the SGSN at the RA level.
  - When the RRC connection is established, the state moves from RRC Idle to RRC Cell Connected, and the MS is tracked by the UTRAN at the cell level.
  - If, for example, no PDUs are transmitted before an *inactivity timer* expires, the state moves from RRC Cell Connected to RRC URA Connected, and the MS is tracked by UTRAN at the URA level.

MM Functions (1/4)

- The MM functions for PS-based services are

(1) PS attach procedure allows an MS to be “known” by the PS service domain of the network.

  - For example, after the MS is powered on, the PS attach procedure must be executed before the MS can obtain access to the PS services.
  - Note that the term “PS attach” is used in UMTS and the term “GPRS attach” is used in GPRS.
  - Similarly, we have the term “CS attach” for UMTS and “IMSI attach” for GPRS.

(2) PS detach procedure allows the MS or the network to inform each other that the MS will not access the SGSN-based services.

MM Functions (2/4)

(3) Security procedures include authentication, user identity confidentiality (e.g., P-TMSI reallocation and P-TMSI signature) and ciphering. Here, we elaborate more on P-TMSI signature.

- When the SGSN allocates the P-TMSI to an MS, it may also send the P-TMSI signature to the MS.
- Then when the next MS identity checking is performed, e.g., in the attach procedure, the MS sends the P-TMSI signature to the SGSN for comparison.
- If the comparison fails, the authentication procedure must be used by the SGSN to authenticate the MS.
- GPRS Ciphering is performed between the MS and the SGSN. UMTS ciphering is performed between the UTRAN and MS.

MM Functions (3/4)

(4) Tunneling of non-GSM signaling message procedures support communication between GPRS/UMTS and non-GSM systems (e.g., EIA/TIA IS-136).

- The SGSN forwards the signaling messages to the non-GSM MSC/VLR using the BSSAP+ protocol in the Gs interface.

MM Functions (4/4)

- Subscriber management procedures are used by the HLR to inform the SGSN about changes of the PS subscriber data.
- Service request procedure (UMTS only) is used by the MS to establish a secure connection to the SGSN, so that the MS can send uplink signaling message or user data.
  - This procedure is used, for example, when the MS replies a page from the UMTS network or when the MS attempts to request resource reservation.
  - In GPRS, LLC link is always established between the MS and SGSN after the attach procedure. Therefore, the service request procedure is not needed and is not defined in GPRS.

MM States

- In GPRS and UMTS, an MM finite state machine is exercised in both SGSN and MS to characterize the mobility management activities for the MS.
- In GPRS, the states in the machine are IDLE, STANDBY and READY.
- For UMTS PS service domain, these states are renamed as PMM-DETACHED, PMM-IDLE and PMM-CONNECTED.
- The MM state machines for both GPRS and UMTS are basically the same.
- The MM states are stored in the MM contexts maintained by the MS and the SGSN.

MM State Diagram (MS)

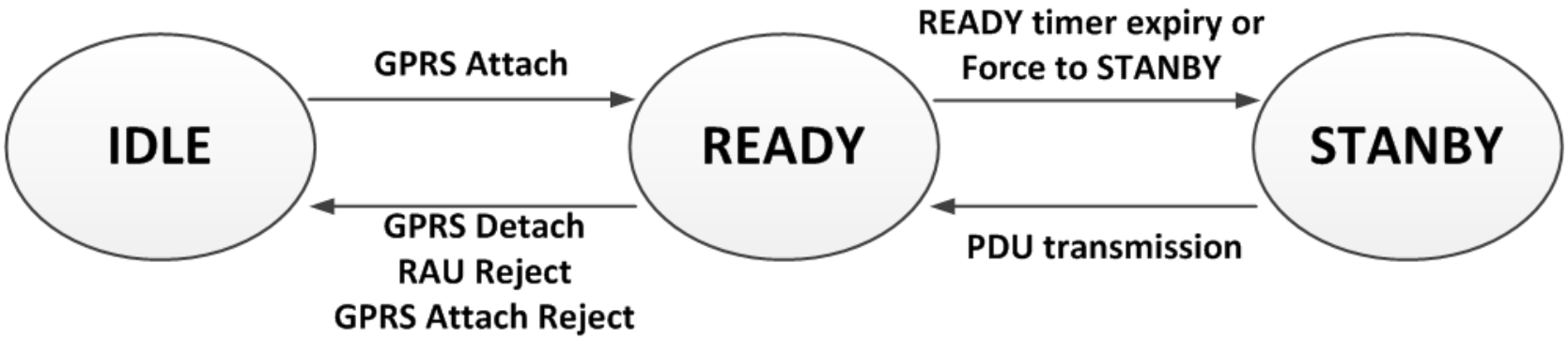

(A) MS MM States for GPRS

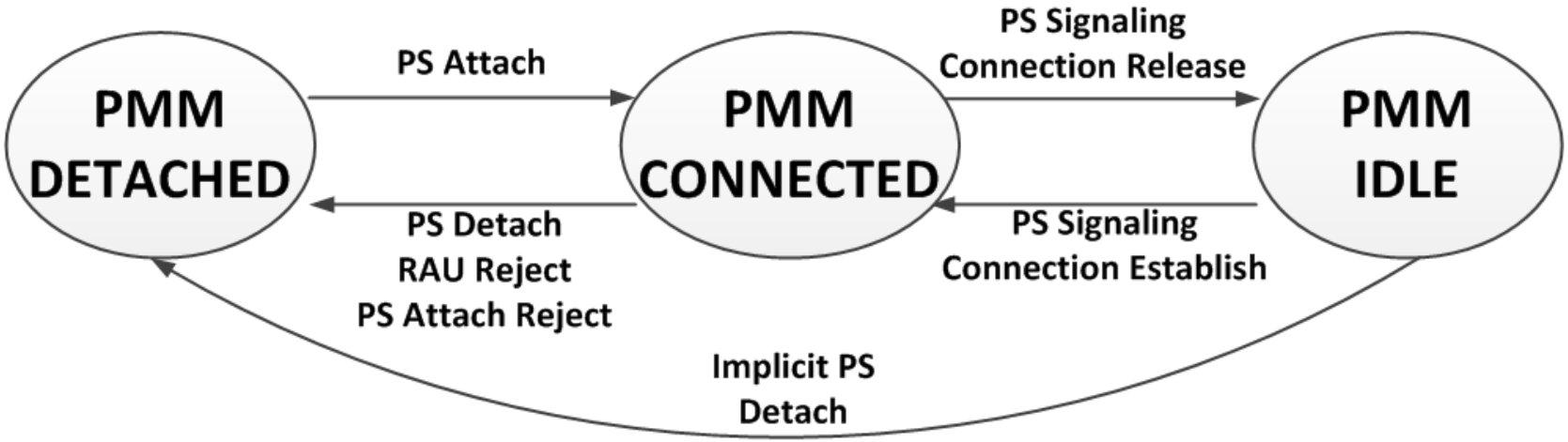

(B) MS MM States for UMTS

MM State Diagram (SGSN)

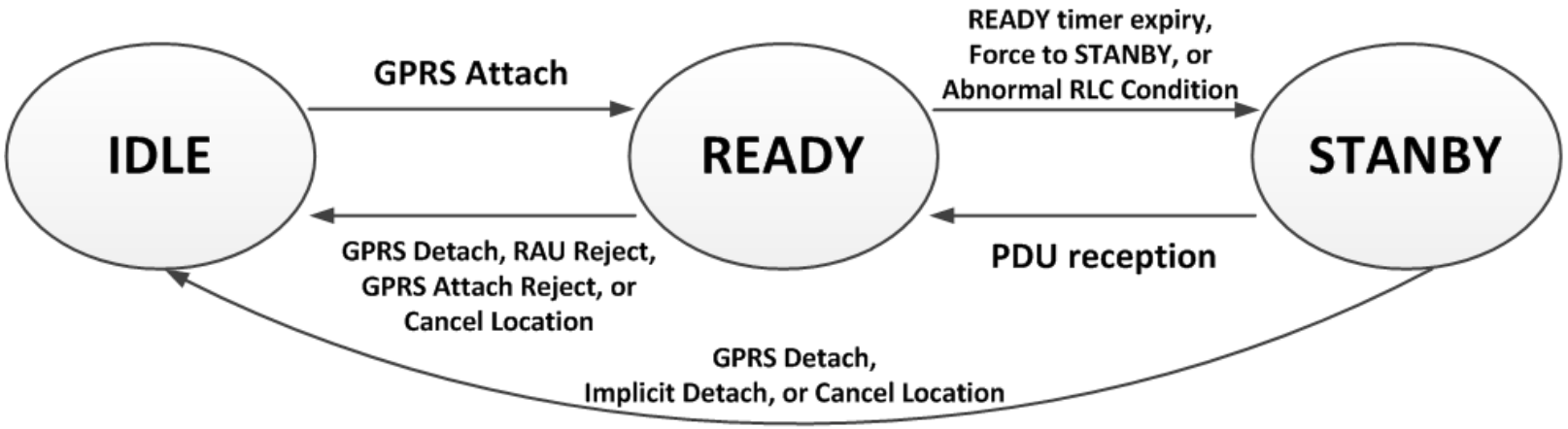

(C) SGSN MM States for GPRS

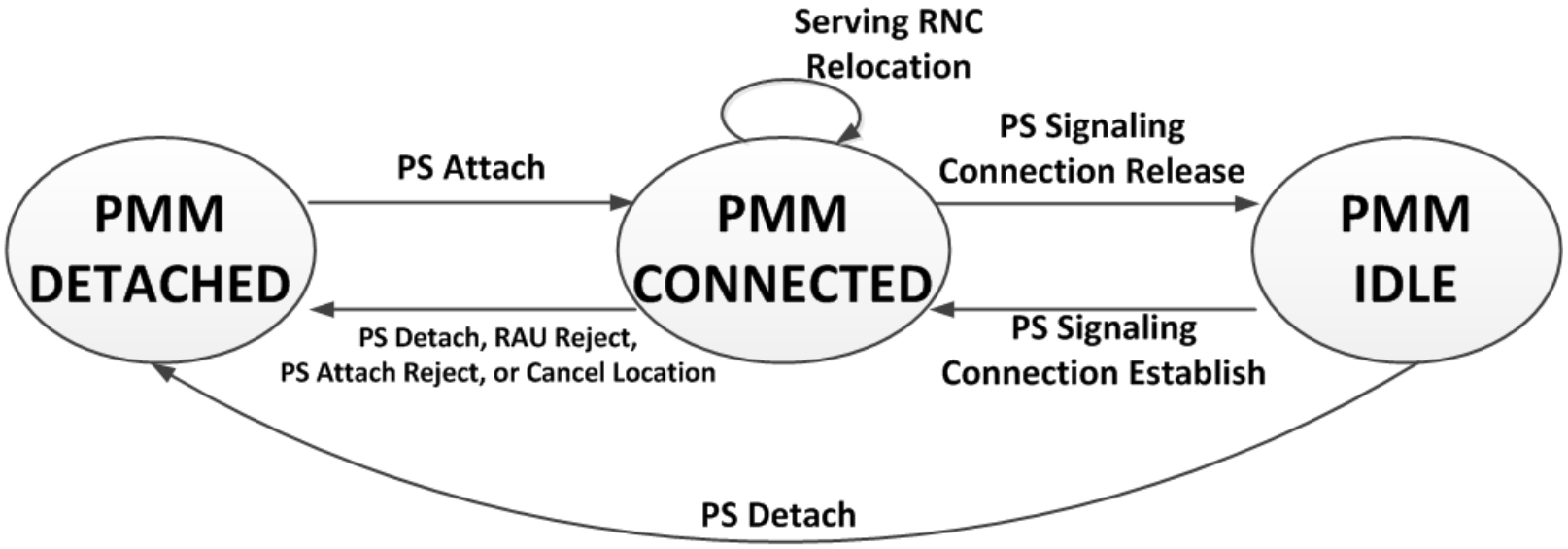

(D) SGSN MM States for UMTS

IDLE or PMM-DETACHED

- The MS is not known (i.e., not attached) to GPRS (UMTS/PS). That is, the MS is not reachable by the network.
- In this state, the MS may perform attach procedure.

STANDYBY or PMM-IDLE

- The MS is attached to GPRS (UMTS/PS); that is, both the MS and SGSN have established MM contexts.
- In this state, the MS may perform the detach and location update procedures.
- The SGSN may perform paging procedure.
- The MS is tracked by the SGSN at the RA level.

READY or PMM-CONNECTED

- PDUs can only be delivered in this state.
- In GPRS, the SGSN tracks the MS at the cell level.
- In UMTS, a PS signaling connection is established between the MS and the SGSN (that is, the MS is in RRC Connected mode).
- The SGSN tracks the MS with accuracy of the RA level, and the serving RNC is responsible for cell level tracking.
- In UMTS, serving RNC relocation is executed in this state.

MM State Transitions

- IDLE to READY (PMM-DETACHED PMM-CONNECTED): This transition is triggered by an MS when the MS performs GPRS/PS attach.

STANDBY to IDLE (PMM-IDLE to PMM-DETACHED) (1/3)

- This transition can be triggered by MS or SGSN.
- This transition is triggered by the SGSN when tracking of MS is lost. In this case, SGSN performs an implicit GPRS/PS detach.
- A mobile reachable timer is maintained in the SGSN to monitor the periodic RA update procedure.
- If the SGSN does not receive RA update request message from the MS after the timer expires, the MS is considered detached.

STANDBY to IDLE (PMM-IDLE to PMM-DETACHED) (2/3)

- The mobile reachable timer is used only when the MM state is STANDBY/PMM-IDLE.
- This transition may also be triggered by SGSN when the SGSN receives a Cancel Location message from the HLR.
- In this case, the MM and the PDP contexts are already moved to the new SGSN that serves the MS, and the contexts in the old SGSN can be deleted.
- Note that the MS will be associated with the new SGSN in this case.

STANDBY to IDLE (PMM-IDLE to PMM-DETACHED) (3/3)

- This transition is triggered by the MS when the MS performs implicit detach due to removal of the SIM card or the battery.
- This case is defined for UMTS, but not for GPRS.

STANDBY to READY (PMM-IDLE to PMM-CONNECTED)

- This transition is triggered by the MS.
- In GPRS, this transition occurs when the MS sends an LLC PDU to the SGSN, possibly in response to a page from the SGSN.
- In UMTS, this transition occurs when the service request procedure is executed (possibly in response of a page from the SGSN) to establish the PS signaling connection between the MS and the SGSN.

READY to STANDBY (PMM-CONNECTED to PMM-IDLE) (1/2)

- This transition is triggered by either SGSN or MS.
- In GPRS, a READY timer is maintained in the MS and the SGSN.
- If no LLC PDU is transmitted before the timer expires, then this MM transition occurs.
- The length of the READY timer can only be changed by the SGSN.
- The MS is informed of the READY timer value change through messages such as Attach Accept and Routing Area Update Accept.

READY to STANDBY (PMM-CONNECTED to PMM-IDLE) (2/2)

- This MM transition may also occur when the SGSN forces to do so, or when abnormal RLC condition is detected during radio transmission.
- In UMTS, this MM transition occurs when the PS signaling connection is released or broken (e.g., RRC connection failure), or when the URA update timer at the RNC expires.

READY to IDLE (PMM-CONNECTED to PMM-DETACHED)

- This transition can be triggered by MS or SGSN.
- This transition is triggered by MS or SGSN when the MS or the network-initiated GPRS/PS detach is performed.
- This transition is triggered by SGSN when the SGSN receives a Cancel Location message from the HLR, or when the SGSN rejects a RA update or an attach request from the MS.
- In UMTS, the PS signaling connection is released after this transition. Specifically, both RRC and SCCP connections are released.
- In GPRS, LLC link is removed after this transition.

Part III: MM and PDP Contexts

MM and PDP Contexts

- Mobility Management (MM) context provides mobility information of an MS.
- Packet Data Protocol (PDP) context provides information to support packet delivery between an MS and the network.
- While an MS may be associated with several PDP contexts, it only has one MM context.
- The MM context is maintained in MS and SGSN.
- The PDP contexts are maintained in MS, SGSN, and GGSN.

MM Context

- The following fields in the MM context are maintained in both GPRS and UMTS SGSN:
  - IMSI, MM state, P-TMSI, P-TMSI signature,
  - International Mobile Equipment Identity (IMEI),
  - Mobile Station ISDN Number (MSISDN),
  - routing area, VLR number, new SGSN address
  - MS network access capability,
  - authentication triplets, Kc (currently used ciphering key), selected ciphering algorithm, subscribed charging characteristics, and several flags.

MM SGSN Context: GPRS vs UMTS (Location Information) (1/2)

- GPRS SGSN maintains cell identity (current cell in READY state, or the last known cell in STANDBY or IDLE state) and cell identity age (time elapsed since the last LLC PDU was received from the MS at the SGSN).
- These two fields are not maintained in UMTS SGSN because cell tracking is performed by the serving RNC.

MM SGSN Context: GPRS vs UMTS (Location Information) (2/2)

- UMTS SGSN maintains the service area code (SAC), and the elapsed time since the last SAC was received at the SGSN.
- The SAC is used to uniquely identify an area consisting of one or more cells belonging to the same location area.
- SAC and the location reporting procedure are used in UMTS for location service (LCS) and other services such as emergency calls.
- These fields are not maintained in GPRS SGSN because the concept of SAC does not exist in GPRS.

MM SGSN Context: GPRS vs UMTS (Security Information)

- UMTS provides enhanced security functions over GPRS, and thus extra security parameters are maintained in the UMTS SGSN MM contexts.
- Specifically, UMTS SGSN maintains authentication vectors, CK (currently used ciphering key), IK (currently used integrity key), and KSI (key set identifier).
- GPRS SGSN maintains CKSN (ciphering key sequence number of Kc). KSI in UMTS corresponds to CKSN in GSM, and they have the same format.
- The CK parameter in UMTS is equivalent to Kc in GPRS.

MM SGSN Context: GPRS vs UMTS (Radio Resource Info) (1/2)

- GPRS SGSN maintains radio access capability (MS's GPRS multislot capabilities and so on) and discontinuous reception (DRX) parameters, radio priority SMS (the RLC/MAC radio priority level for uplink SMS transmission).
- DRX allows discontinuous radio transmission to save the power consumption of the MS.

MM SGSN Context: GPRS vs UMTS (Radio Resource Info) (2/2)

- In UMTS, the radio resources are controlled by UTRAN. Thus, the above fields are not kept in the UMTS SGSN MM context.
- In GPRS if DRX mode is selected, the MS may specify the DRX parameters that indicate the delay for the network to send a page request or a channel assignment to the MS.
- DRX usage is independent of the MM states. However, during the GPRS attach and RA update, the GPRS MS shall not apply DRX in READY state.
- In UMTS, DRX parameter was not shown in the SGSN MM context in 3G TS 23.060 Version 3.2.1. In Version 3.6.0, this parameter is added in UMTS SGSN MM context .

PDP Contexts in SGSN (1/3)

- PDP route information (PDP context identifier, PDP state, PDP type, and PDP address)
- Access Point Name (APN) information (APN subscribed and APN in use)
- QoS information (QoS profile subscribed, QoS profile requested and QoS profile negotiated)
- N-PDU information (GTP-SND and GTP-SNU). The GTP-SND (GTP-SNU) parameter is the GTP sequence number of the N-PDU to be sent from the SGSN to the MS (GGSN).
- Charging information (charging id)

PDP Contexts in SGSN (2/3)

- Other routing information (NSAPI, TI, TEID for Gn/Gp, GGSN address in use, and VPLMN address allowed).
- Network layer Service Access Point Identifier (NSAPI) is used by LLC (in GPRS) or RLC (in UMTS) to route the N-PDUs to appropriate higher layer protocols such as signaling, SMS, or packet data protocols.
- Transaction identifier (TI) is used to represent NSAPI for some session management signaling messages.
- VPLMN specifies the GPRS/UMTS networks visited by the MS.

PDP Contexts in SGSN (3/3)

- Subscribed Charging Characteristics can be normal, prepaid, flat-rate, and /or hot billing.
- In the early GPRS/UMTS version, charging characteristics for PDP contexts are maintained in the SGSN.
- In the latest version, charging characteristics are included in SGSN MM context.

PDP SGSN Context: GPRS vs UMTS (1/2)

- Core Network to Radio Access Network Connection
  - The UMTS maintains the TEID for the Iu interface and the IP address of the RNC currently used.
  - These two fields are not maintained in the GPRS SGSN
- Radio Resource Information
  - The GPRS SGSN maintains radio priority (the RLC/MAC radio priority level for uplink user data transmission).
  - These fields are not kept in UMTS SGSN.

PDP SGSN Context: GPRS vs UMTS (2/2)

- PDU Information
  - GPRS SGSN maintains Send N-PDU number (SNDCP sequence number of the next downlink N-PDU to be sent to the MS), Receive N-PDU number (SNDCP sequence number of the next uplink N-PDU to be received from the MS), packet flow identifier and aggregate BSS QoS profile negotiated.
  - On the other hand, UMTS SGSN maintains PDCP-SND (the next PDCP sequence number to be sent to the MS) and PDCP-SNU (the next PDCP sequence number expected from the MS).

MM Radio Resource Information (1/2)

- Both GPRS and UMTS, the radio resource information for SMS is kept in the MM context, while the radio resource information for user data is maintained in the PDP context.
- The PDP context is defined for data transfer in the user plane. The MM context is defined for mobility management signaling in the control plane.

MM Radio Resource Information (2/2)

- SMS is delivered through the control plane by using common channel, which is more efficient than delivery through the user plane.
- Through the control plane, the same SMS transfer procedure is used for both CS and PS domains.
- Thus, the radio resource information for SMS is kept in the MM context.

MS MM Context

- IMSI, MM State, P-TMSI, P-TMSI signature
- Routing Area
- MS network access capability
- CKSN/KSI, Ciphering Algorithm
- DRX Parameters

MS MM Context: GPRS vs UMTS

- Location Information
  - GPRS MS maintains cell identity.
  - In UMTS, cell tracking is not conducted at the mobility management layer between the MS and the SGSN.
  - Thus, cell identity is not maintained in the MM context of the MS. Instead, it is maintained between the MS and the UTRAN.
- Security Information
  - UMTS MS maintains extra security parameter CK next.

MS MM Context: GPRS vs UMTS (Radio Resource Information)

- GPRS MS maintains radio priority SMS.
- In UMTS, the SMS as well as signaling are delivered through dedicated control channels.
- Thus the radio priority is not maintained in the UMTS MS.
- The GPRS MS maintains the MS radio access capability,(e.g., multislot capability and power class)
- The UMTS MS maintains UE capability (e.g., power control, code resource, UE mode, and PDCP capability).

MS PDP context

- PDP type, PDP address, PDP state, dynamic address allowed,
- APN requested, NSAPI, TI,
- QoS profile requested, QoS profile negotiated, and
- A flag

MS PDP Context: GPRS vs UMTS

- Radio Information
  - The GPRS MS maintains radio priority.
  - In UMTS, the radio priority for data delivery is determined by QoS profile, and the radio priority is not kept separately in the MS.
- PDU Delivery Information
  - GPRS MS maintains BSS packet flow identifier, Send N-PDU number and Receive N-PDU number.
  - UMTS MS maintains PDCP-SND and PDCP-SNU.

Relationship between MM States & Contexts (1/3)

- The status of an MM/PDP context is affected by the MM states
- IDLE (PMM-DETACHED)
  - The PDP context in the GGSN is deleted.
  - The MM and PDP contexts in MS and SGSN may or may not be deleted.
  - If the MM state moves from STANDBY/PMM-IDLE to IDLE/MM-DETACHED because the mobile reachable timer expires (e.g., the MS is temporarily out of the GPRS/UMTS coverage), then these two contexts shall not be deleted.
  - In this case, the location and routing information is stale.

Relationship between MM States & Contexts (2/3)

- STANDBY (PMM-IDLE)
  - In the STANDBY/PMM-IDLE state, valid MM contexts are maintained in the MS and the SGSN.
  - In this state, the PDP context can be activated and deactivated.
  - In UMTS, when the PDP context is activated in this state, no Iu/radio connection is established between the MS and the network because PDU delivery is not allowed in this state.
  - In GPRS the LLC link is connected.

Relationship between MM States & Contexts (3/3)

- READY (PMM-CONNECTED)
  - In the READY/PMM-CONNECTED state, valid MM contexts are maintained in the MS and the SGSN.
  - As in the STANDBY/PMM-IDLE state, the MS may initiate PDP context activation and deactivation.
  - In this state, the signaling connection is established in UMTS.

Part IV: UMTS Procedures

Attach

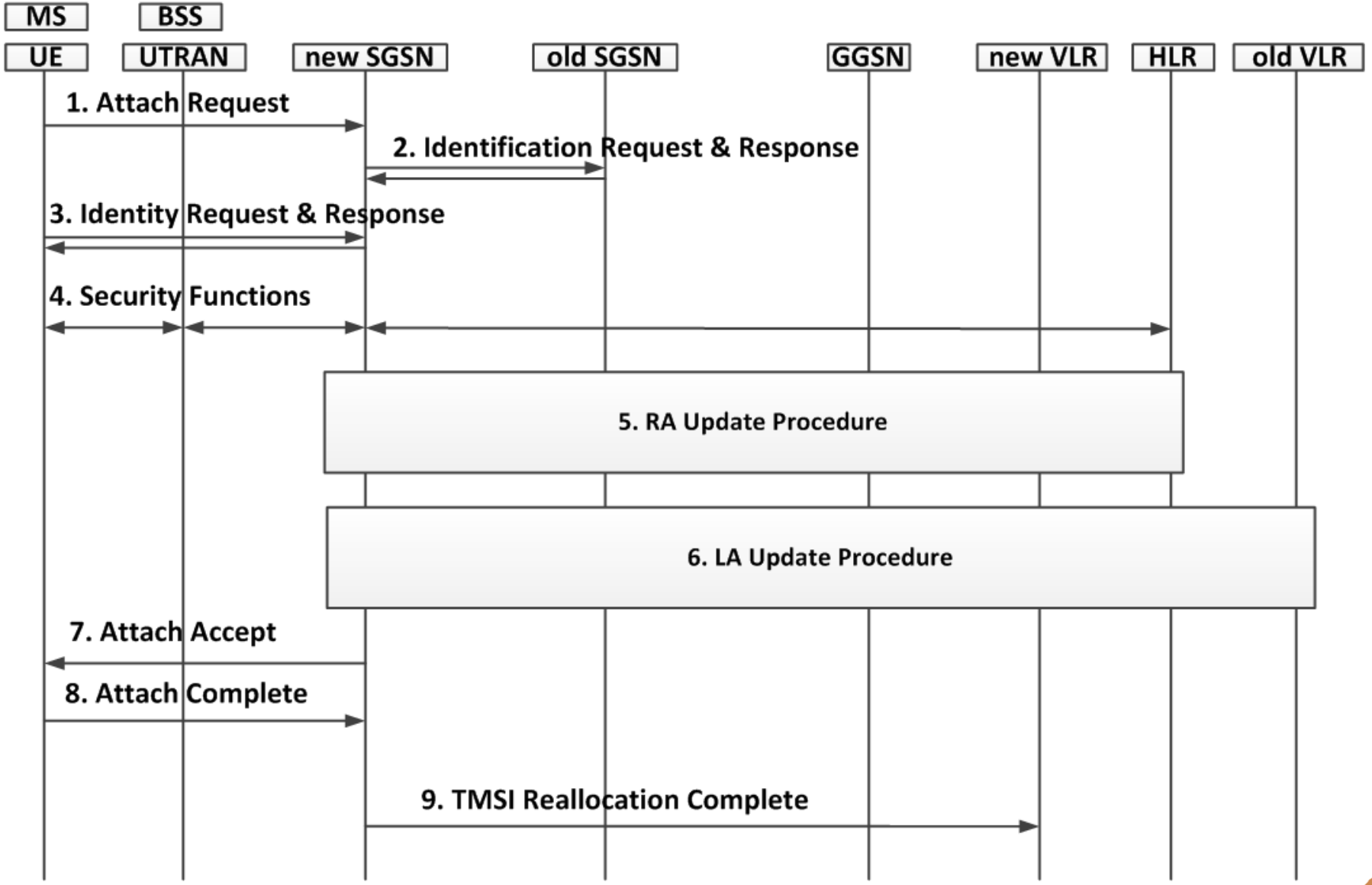
MS
BSS
UE
UTRAN
new SGSN
old SGSN
GGSN
new VLR
HLR
old VLR
1. Attach Request
2. Identification Request & Response
3. Identity Request & Response
4. Security Functions
5. RA Update Procedure
6. LA Update Procedure
7. Attach Accept
8. Attach Complete
9. TMSI Reallocation Complete

Attach: Step 1 (1/3)

- The MS initiates the attach procedure by sending the Attach Request message to the SGSN.
- In GPRS, besides the MS network access capability, the message includes parameters such as MS radio access capability.
- These radio related parameters are not included in UMTS Attach Request message.

Attach: Step 1 (2/3)

- The UMTS message includes the ``follow on request'' field to indicate if there is pending uplink traffic that needs Iu connection after the attach procedure is completed.
- This field is not needed in GPRS because the Iu interface does not exist.
- Furthermore, the security parameters for UMTS and for GPRS are different.

Attach: Step 1 (3/3)

- When the receives the attach request at the end of Step 1, there are several possibilities:
  - If the MS has changed SGSN since last detach, then Step 2 is executed so that the new SGSN can obtain the MS identity (i.e., IMSI) form the old SGSN.
  - If the MS has not changed SGSN, then the received P-TMSI is used by the SGSN to identify the MM context of the MS.
  - If the MM context has not been deleted since last detach (i.e., the MS is known by the new SGSN), then Steps 2-6 are skipped, and Step 7 is executed.
  - Otherwise (the MS is not known by the old and the new SGSNs), Step 2 is skipped, and Step 3 is executed.

Attach: Step 2

- The MS is known by the old SGSN.
- The new SGSN sends the Identification Request message to the old SGSN.
- The P-TMSI is used to obtain the IMSI and authentication information from the old SGSN.
- If the old SGSN cannot find the MM context for the MS, then Step 3 is executed.
- Otherwise the IMSI is returned to the new SGSN, and Step 4 is executed.

Attach: Steps 3-5

- **Step 3**. The MS is unknown in both the old and the new SGSNs. The new SGSN asks the MS to supply IMSI through the Identity Request and Response messages exchange.
- **Step 4**. Authentication is mandatory if the MM context of the MS has been deleted since last detach. The equipment (IMEI) may be optionally checked.
- **Step 5**. If the MS has moved from the old SGSN to the new SGSN since last detach or if the MS is performing the first attach, then the RA update procedure is executed so that the new SGSN can obtain the current MM context of the MS.

Attach: Step 6

- If the Gs interface does not exist, then this step is skipped.
- Otherwise (Gs exists), the attach type in Step 1 is checked.
- If attach type indicates (1) combined PS/CS attach or (2) PS attach and the MS is already CS attach, then LA update is performed.
- The LA update is required so that the SGSN-VLR association is established and the VLR can maintain current LA information of the MS.

Attach: Step 7

- For GPRS, if attach is successful, then the SGSN selects radio priority SMS and sends the Attach Accept message to the MS.
- P-TMSI is included in the message if the SGSN allocates a new P-TMSI.
- In UMTS, radio priority SMS is not maintained in mobility management.
- However, this parameter is still reserved in the UMTS Attach Accept message in order to support handoff between UMTS and GSM networks.

Attach: Steps 8 and 9

- **Step 8.** If P-TMSI or TMSI have been changed, the MS sends the Attach Complete message to the SGSN to acknowledge receipt of the TMSIs.
- **Step 9.** If TMSI has been changed, the SGSN sends the TMSI Reallocation Complete message to the VLR.
- After PS attach, the MS is in the READY (for GPRS) or the PMM-CONNECTED (for UMTS) state and MM contexts are established in the MS and the SGSN.

Detach

- The PS detach procedures are basically the same for both GPRS and UMTS.
- The network or the MS may request detach explicitly.
- When PS detach is executed, the MS will not receive the SGSN-based service.
- Implicit PS detach is executed by the network (without notifying the MS) if the mobile reachable timer expires or when radio path is disconnected due to errors.
- After implicit PS detach is performed, the MS's MM context is deleted after an implementation dependent timeout period.
- The PS detach procedure also inactivates the PDP contexts.

Location Update

- In location management, the MS informs the network of its location through RA and LA update procedures.
- The update procedures are executed in two situations.
- Normal location update is performed when the MS detects that the location has been changed.
- Periodic location update is exercised even if the MS does not move. That is, the MS periodically reports its ``presence'' to the network.

Combined RA/LA Update

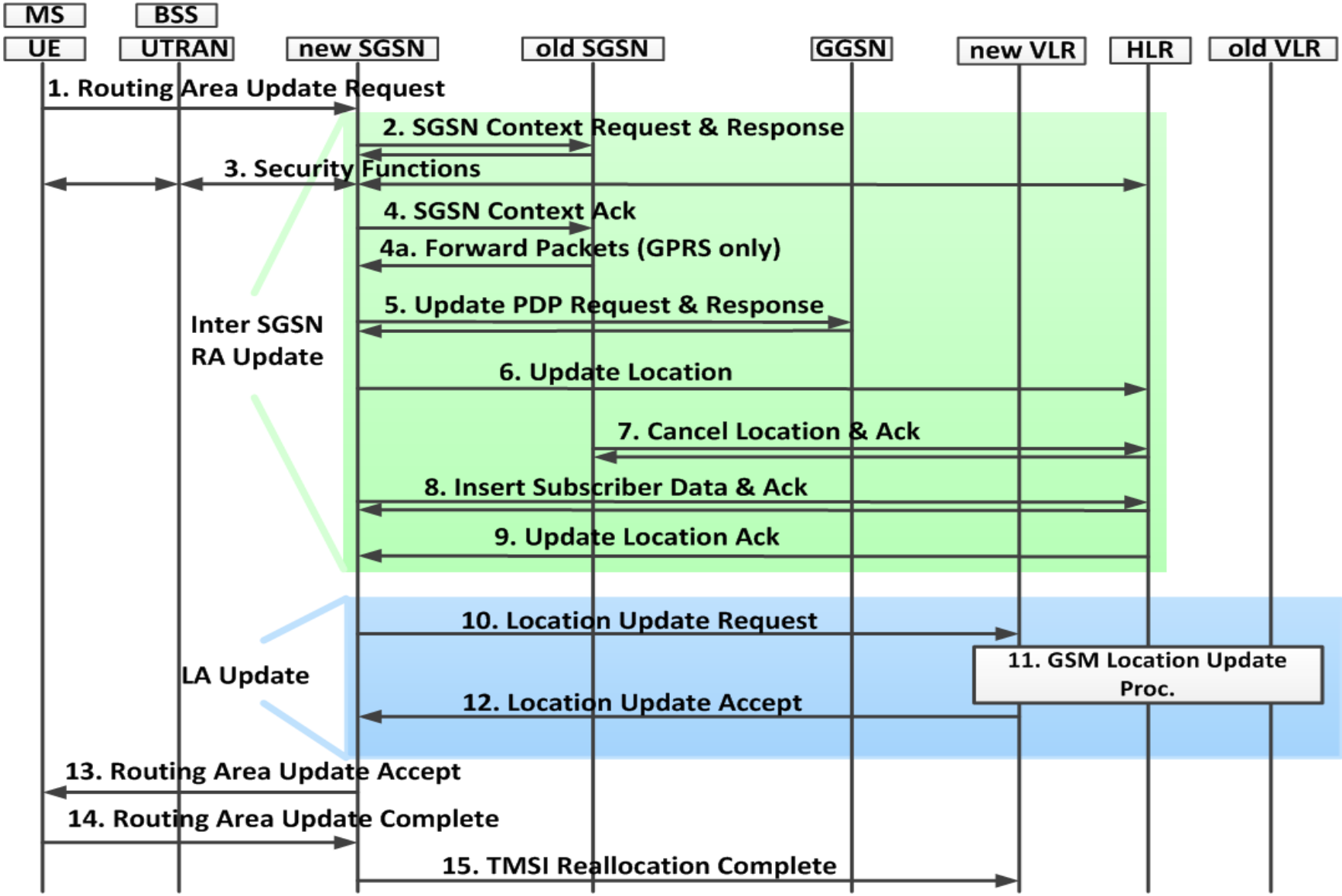

Combined RA/LA Update: Step 1 (1/2)

- The MS sends the Routing Area Update Request message to the new SGSN.
- This message is not ciphered so that the new SGSN can process the message.
- For both GPRS and UMTS, the update type can be RA update, periodic RA update, combined RA/LA update, or combined RA/LA update with IMSI attach.

Combined RA/LA Update: Step 1 (2/2)

- The “follow on request”' parameter is used in UMTS to indicate if the Iu connection should be kept for pending uplink traffic. This parameter does not exist in GPRS.
- In GPRS, before the BSS passes the message to the SGSN, it adds the cell global identity information (including cell, RA and LA identities).
- In UMTS, the RNC adds the routing area identity information (including RA and LA identities).
- For inter-SGSN update, Steps 2-9 are executed. Otherwise (intra-SGSN update), these steps are skipped.

Combined RA/LA Update: Step 2 (1/2)

- To obtain the MM and PDP contexts of the MS, the new SGSN sends the SGSN Context Request message to the old SGSN.
- Basically, the old SGSN validates the old P-TMSI signature, and returns the MM and the PDP contexts of the MS using the SGSN Context Response message.
- The old SGSN starts a timer. The MM context in the old SGSN is deleted when both of the following conditions are satisfied: the timer expires, and the old SGSN receives the Cancel Location message from the HLR.

Combined RA/LA Update: Step 2 (2/2)

- This timer mechanism ensures that if the MS initiates another inter-SGSN routing area update before the current update procedure is completed, the old SGSN still keeps the MM context.
- In GPRS, the old SGSN stops assigning SNDCP N-PDU numbers to downlink N-PDUs received. The old SGSN will forward buffered packets to the new SGSN at Step 4a.
- In UMTS, packet forwarding is not performed between the SGSNs. Also, the temporary logical link identity (TLLI) included in the GPRS SGSN Context Request message is not found in the UMTS message.

Combined RA/LA Update: Step 3

- If the old P-TMSI signature checking at Step 2 fails, security function involving MS, BSS/UTRAN, new SGSN, and the HLR is performed.
- If this security procedure also fails, then the old SGSN continues as if the SGSN Context Request message is never received and this procedure exits.
- Otherwise (security check successes), Step 4 is executed.

Combined RA/LA Update: Step 4

- The new SGSN sends the SGSN Context Acknowledge message to the old SGSN, which invalids the SGSN-VLR association in the old MM context.
- In GPRS, this message includes the address of the new SGSN, which is used to inform the old SGSN that new SGSN is ready to receive the buffered packets to be forwarded from the old SGSN.
- The new SGSN address is not included in the UMTS SGSN Context Acknowledge message.
- Step 4a (GPRS only). The old SGSN then tunnels the buffered N-PDUs to the new SGSN. No packets are forwarded from the old SGSN to the new SGSN in UMTS.

Combined RA/LA Update: Steps 5-7

- **Step 5.** The new SGSN sends the Update PDP Context Request message to the corresponding GGSNs. With this message, the GGSN PDP contexts are modified. The GGSNs return the Update PDP Context Response messages.
- **Step 6.** The SGSN issues the Update Location message to inform the HLR that the SGSN for the MS has been changed.
- **Step 7.** The HLR and the old SGSN exchange the Cancel Location message pair. The MM and the PDP contexts in the old SGSN is not deleted until the timer described in Step 2 expires.

Combined RA/LA Update: Steps 8 and 9

- The HLR inserts the subscriber data to the new SGSN.
- For each PDP context, the new SGSN checks if the context is new, active, or inactive.
- If the PDP context is active, then extra tasks are performed by the SGSN.
- For example, the SGSN compares if the received “QoS subscribed‘” value is the same as the value of the QoS negotiated parameter.
- If not, the SGSN should initiate the PDP context modification procedure to adjust the QoS parameters of the context.

Combined RA/LA Update: Steps 10-12

- Steps 10-12 are executed if the new SGSN detects that the LA has been changed or the update type in Step 1 indicates combined RA/LA update with IMSI (CS) attach.
- **Step 10 (LA Update).** Through a table lookup technique, the SGSN translated RA identity (RAI) into the VLR number and sends the Location Update Request message to the VLR (after Step 8 is executed). The VLR creates or updates the SGSN-VLR association by storing the SGSN number.
- **Step 11.** The standard GSM location update procedure is performed.
- **Step 12.** The new VLR allocates a new TMSI and responds with Location Update Accept to the SGSN. Allocation of TMSI is optional if the VLR is not changed.

Combined RA/LA Update: Steps 13-15

- **Step 13.** The new SGSN sends the Routing Area Update Accept message to the MS.
  - In GPRS, the new SGSN also confirms all mobile-originated N-PDUs successfully transferred before the start of the update procedure.
- **Step 14.** The MS sends the Routing Area Update Complete message to the new SGSN to confirm the reallocation of the TMSI.
  - In GPRS, the MS also confirms all received mobile-terminated N-PDUs before the RA update procedure started.
  - This information is used by the new SGSN to check if the packets forwarded from the old SGSN have been received by the MS. If so, these redundant packets are discarded.
- **Step 15.** If a new TMSI has been received by the MS, then the TMSI Reallocation Complete message is sent to the VLR.

Combined RA/LA Update (GPRS vs UMTS)

- In terms of RA update, the major differences between UMTS and GPRS are the following:
  - In GPRS, packet forwarding is performed between old and new SGSN during RA update.
  - In UMTS, packet forwarding is handled at the RNC level, and the SGSN is not involved.
  - In the RA update, the UMTS MS may determine if the Iu connection should be maintained, which is not needed in GPRS.
- Note that for a pure intra-SGSN RA update, Steps 2-12, 14 and 15 are not executed. For a pure inter-SGSN RA update, Steps 10-12, and 15 are not executed.

Inter-SGSN SRNC Relocation

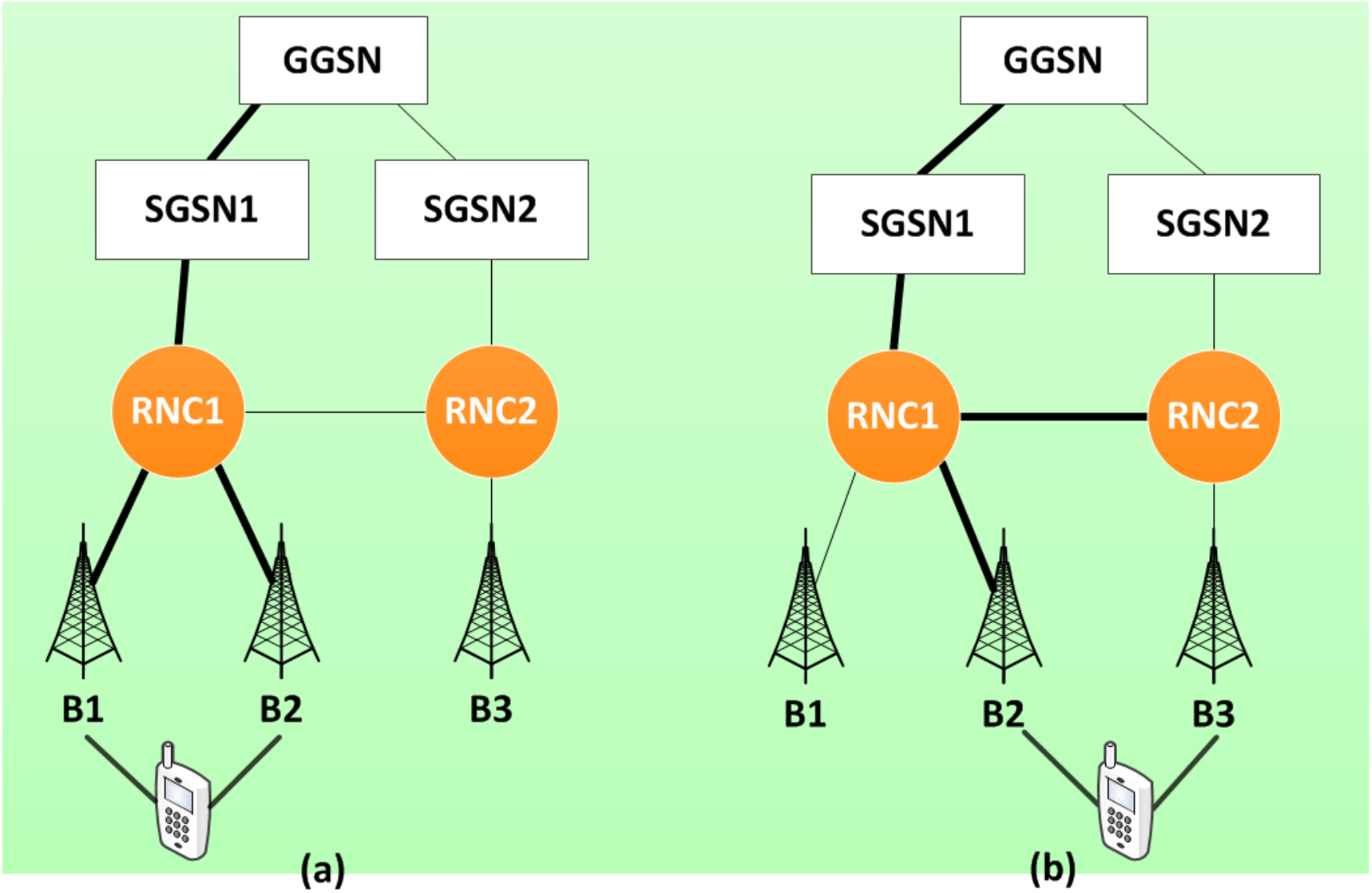

SRNC and DRNC (1/5)

- Packets are routed between the MS and the GGSN. The MS communicates with two Node Bs (B1 and B2).
- In WCDMA , an MS is allowed to transmit signal through multiple radio paths connected to different Node Bs, and the signals are merged in a network node (RNC1).
- In a packet routing path between the core network and the MS, the RNC that directly connects to the SGSN is called the serving RNC (SRNC).

SRNC and DRNC (2/5)

- When the MS moves toward Node B3, the radio link between the MS and B1 is removed due to radio path loss, and the radio link between B3 and the MS is added.
- In this case, B3 is connected to RNC2, and an Iur link between RNC1 and RNC2 is established so that the signal received by B3 can be forwarded to RNC1 through RNC2.
- RNC1 then combines the signals from B2 and B3, and forwards it to SGSN1. In this case, RNC1 is the SRNC, and RNC2 is called the drift RNC (DRNC).

SRNC and DRNC (3/5)

- DRNC transparently routes the data through the Iub and the Iur interfaces.
- It only performs Layer 1 and partial Layer 2 functionality (e.g., MAC for common and shared channels).
- Thus, the RLC connections are defined between the SRNC and the MS, and the DRNC is bypassed.

SRNC and DRNC (4/5)

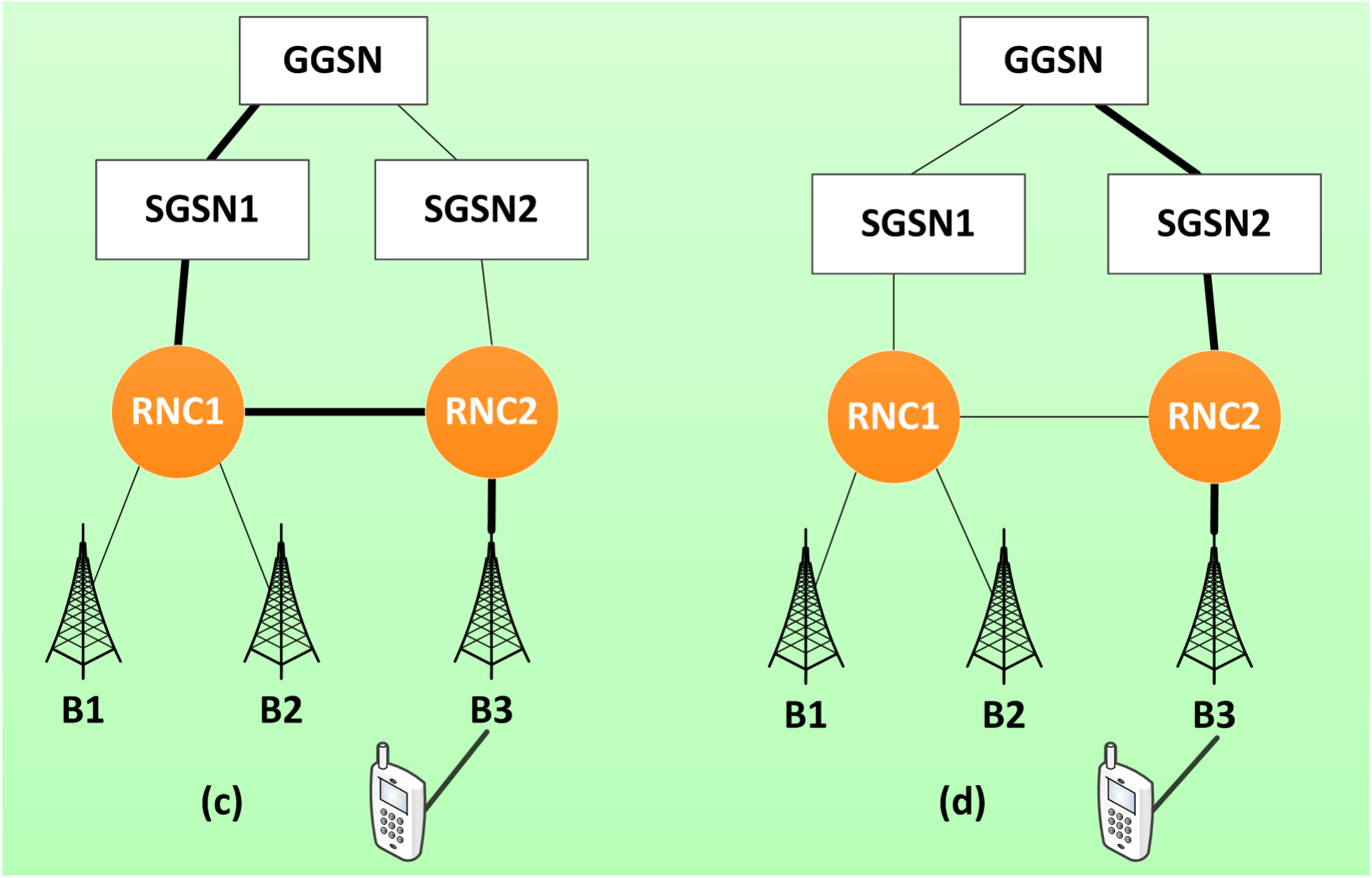

SRNC and DRNC (5/5)

- Suppose that the MS moves away from B2, and the radio link between the MS and B2 is disconnected.
- In this case, the MS does not communicate with any Node Bs connected to RNC1.
- The routing path is now MS--B3--RNC2--RNC1--SGSN1--GGSN.
- In this case, it does not make sense to route packets between the MS and the core network through RNC1.

PS SRNC Relocation

- SRNC relocation may be performed to remove RNC1 from the routing path.
- Suppose that RNC2 connects to SGSN2. Then after RNC relocation, the packets are routed to the GGSN through RNC2 and SGSN2. At this point, RNC2 becomes the serving RNC.
- SRNC relocation may also be executed when hard handoff occurs (and the MS is in the PMM-CONNECTED state).

PS SRNC Relocation with Hard Handoff (1/2)

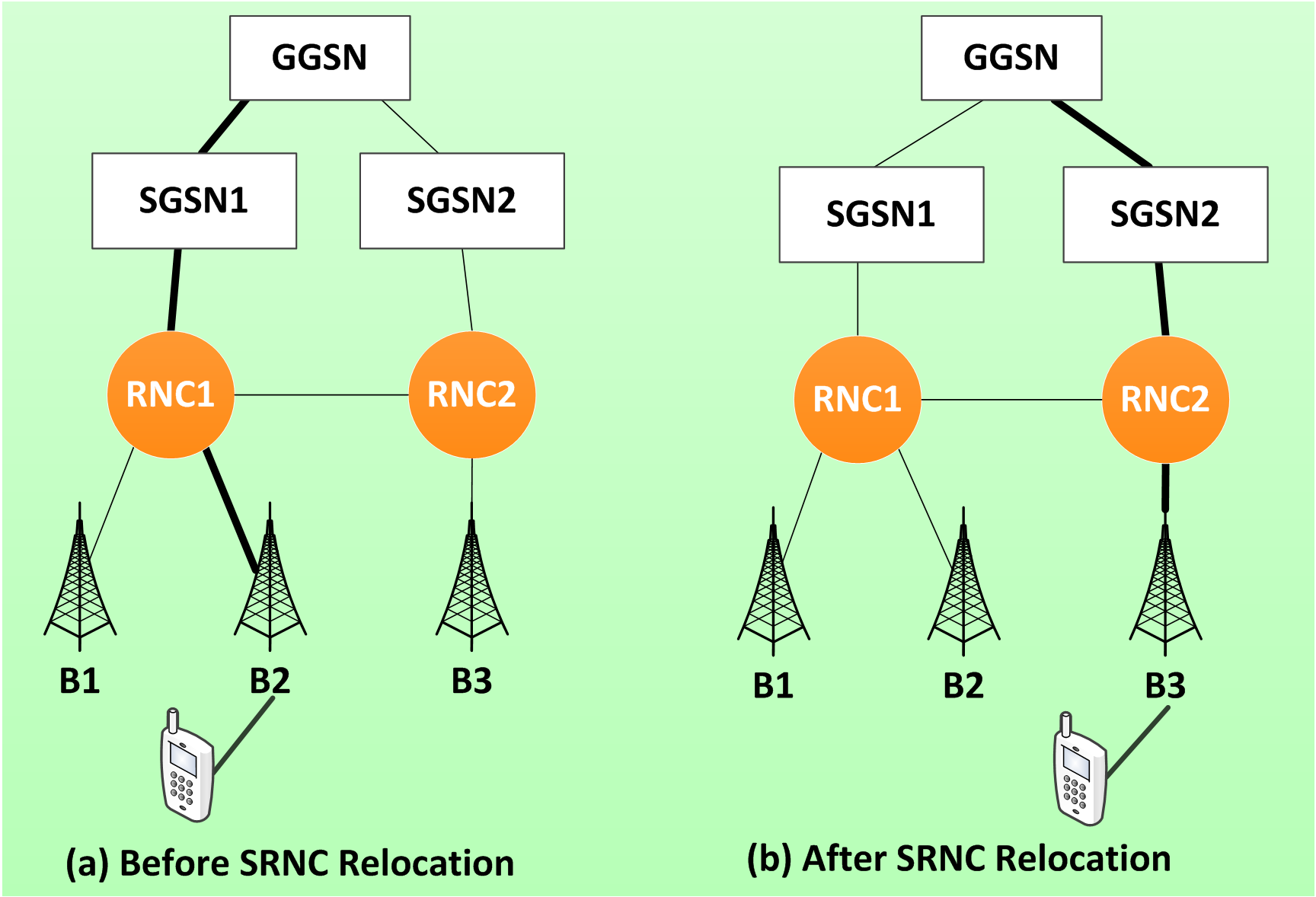

PS SRNC Relocation with Hard Handoff (2/2)

- Before the relocation, the communication path is GGSN--SGSN1--RNC1--B2--MS, and the MS is not connected to any Node Bs of RNC2.
- During hard handoff and SRNC relocation, the radio link connected to the MS is switched from B2 to B3.
- After the relocation, the communication path is GGSN--SGSN2--RNC2--B3--MS.

CS SRNC Relocation (1/2)

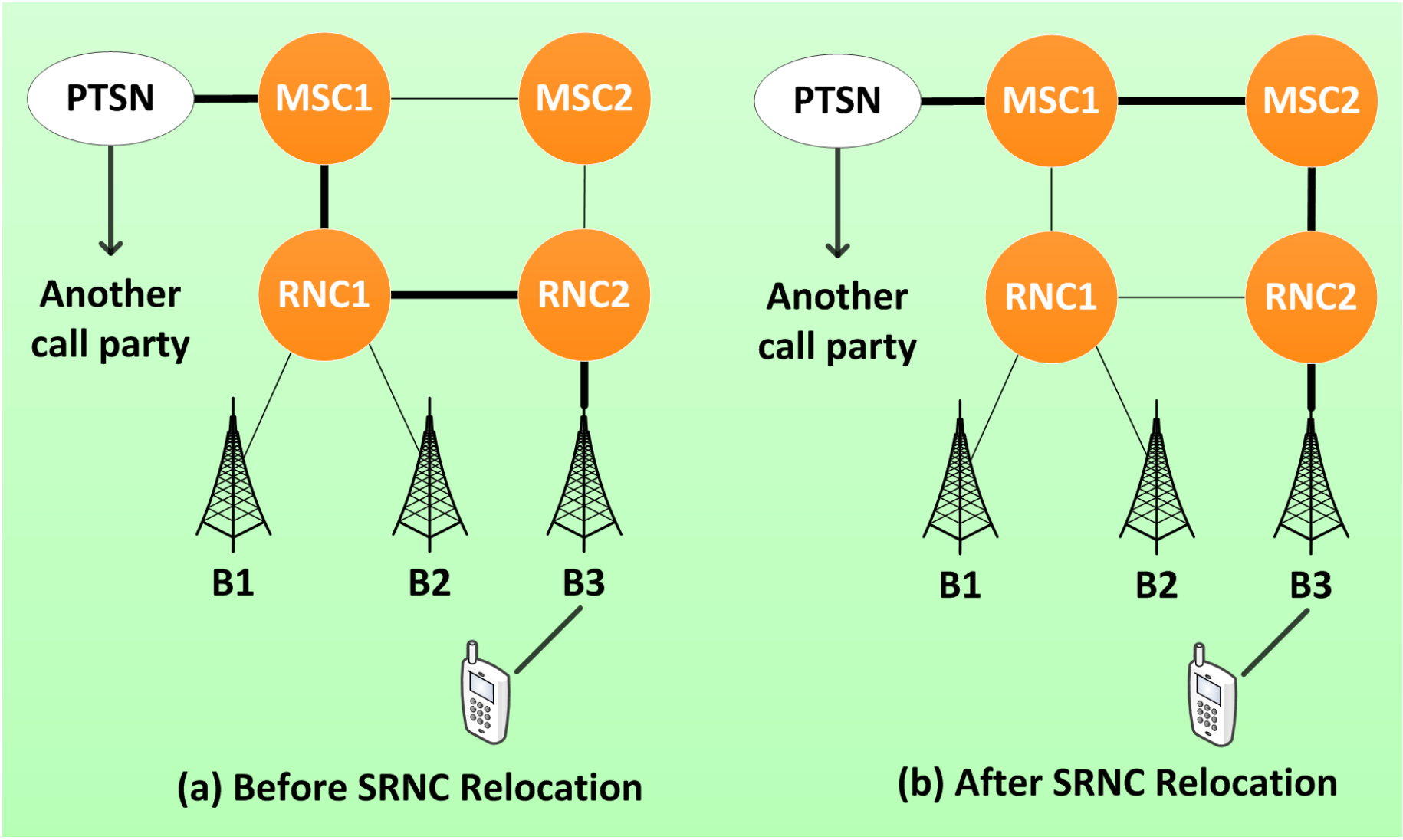

CS SRNC Relocation (2/2)

- The SRNC relocation procedures for PS and CS services are different.
- Before CS relocation, the call path is MSC1—RNC1--RNC2--MS.
- After the relocation, the call path is MSC1--MSC2--RNC2--MS, and MSC1 becomes the anchor MSC.

PS SRNC Relocation Procedure (1/2)

- This procedure is only performed for an MS in PMM-CONNECTED state
  - Before CS relocation, the call path is MSC1—RNC1—RNC2—MS.
  - After the relocation, the call path is MSC1—MSC2—RNC2—MS, and MSC1 becomes the anchor MSC.

PS SRNC Relocation Procedure (2/2)

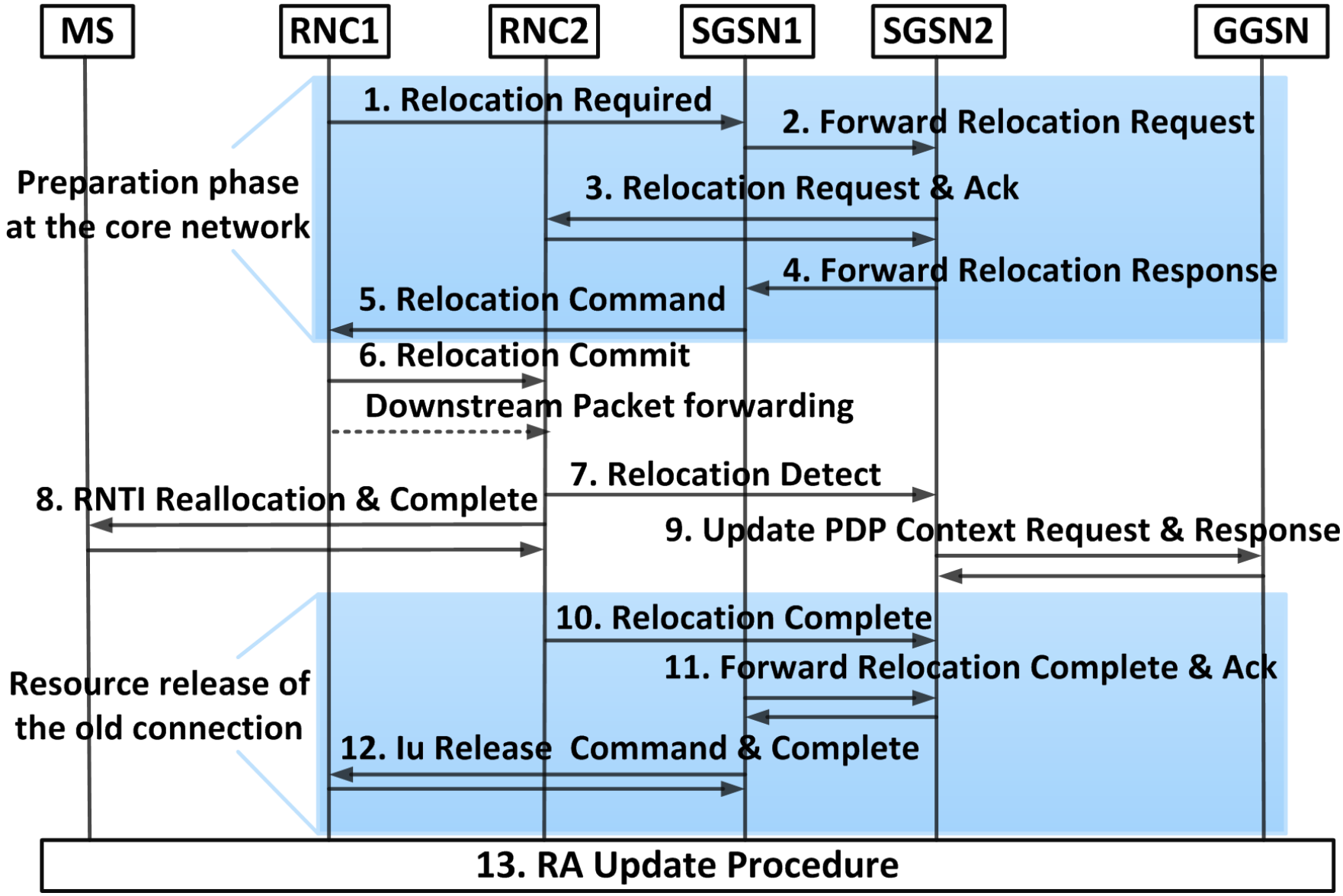

PS SRNC Relocation Procedure: Steps 1 and 2

- **Step 1.** RNC1 determines that RNC2 is the target for relocation, and informs SGSN1 of this decision through the Relocation Required message.
- **Step 2.** If both RNC2 and RNC1 are connected to SGSN1 (intra SGSN relocation), Steps 2-4 are skipped, and the relocation procedure proceeds to Step 5. Otherwise, it is an inter-SGSN SRNC relocation. In this case, suppose that RNC2 connects to SGSN2. Then SGSN1 sends the MM and the PDP contexts of the MS to SGSN2 by using the Forward Relocation Request message.

PS SRNC Relocation Procedure: Steps 3 and 4

- **Step 3.** SGSN2 and RNC2 exchange the Relocation Request and Response message pair to establish the Iu user plane transport bearers between SGSN2 and RNC2, and exchange routing information required for packet delivery.
- **Step 4.** SGSN2 sends the Forward Relocation Response message to SGSN1. The message indicates that SGSN2 and RNC2 are ready to receive the downstream packets buffered in RNC1 (i.e., the packets that have not been acknowledged by the MS).

PS SRNC Relocation: Step 5

- **Step 5.** SGSN1 sends the Relocation Command message to RNC1. This message instructs RNC1 to forward the buffered downstream packets to RNC2.
- Note that Steps 1-5 reserve the core network resources for the new path. Before Step 6 is executed, the packets are routed through the old path.

PS SRNC Relocation: Step 6

- RNC1 receives the Relocation Command message, it starts the data-forwarding timer.
- Expiration of this timer will be checked at Step 12.
- RNC1 sends the Relocation Commit message to RNC2, which provides information about the buffered packets (e.g., sequence numbers) to be tunneled to RNC2.
- RNC1 stops exchanging packets with the MS, and forwards the buffered packets (which are sent from GGSN) to RNC2.
- RNC2 switches all bearers from the RNC1 to the SGSN.

PS SRNC Relocation: Step 7

- Immediately after RNC2 is successful switched at Step 6, RNC2 sends Relocation Detect message to SGSN2.

- The purpose of this message is to inform the SGSN2 that RNC2 is starting the SRNC operation, and the CN should switch the packet routing path from RNC1 to RNC2.

PS SRNC Relocation: Step 8 (1/2)

- RNC2 restarts the RLC connections.
- RNC2 and the MS exchange information to identify the last upstream packets received by RNC2 and the last downstream packets received by the MS. This is achieved by exchanging the RNTI Reallocation and Complete message pair.
- In the RNTI Reallocation message, RNC2 provides RA, LA, and possibly RRC information.
- Since the RA has been changed, the MS also triggers the RA update procedure shown at Step 13.

PS SRNC Relocation: Step 8 (2/2)

- After the MS has reconfigured itself, it sends the RNTI Reallocation Complete message to the RNC2.
- The packet exchange with the MS can start.
- Note that the message RNTI Reallocation is not found in 3GPP specifications (specifically, 3GPP 25.331). Instead, we found that two messages, UTRAN Mobility Information and UTRAN Mobility Information Confirm, can be used by UTRAN to allocate a new RNTI and to convey other UTRAN mobility related information to an MS.
- Note that in Steps 6-8, the UTRAN connection point is moved from RNC1 to RNC2.
  - In this period, packet exchange between the MS and network is stopped for lossless relocation.

PS SRNC Relocation: Step 9

- After Step 7, the SGSN2 switches the user plane from RNC1 to RNC2.
- For inter SGSN SRNS relocation, SGSN2 and every corresponding GGSN exchange the Update PDP Context Request and Response message pair to modify the GGSN address, SGSN TEID,and QoS profile negotiated stored in the GGSN PDP context.
- This operation switches the GGSN connection from SGSN1 to SGSN2.

PS SRNC Relocation: Step 10

- After Step 8, RNC2 sends the Relocation Complete message to SGSN2.
- This message triggers resource release of the old Iu connection.
- For intra-SGSN SRNC relocation (i.e., SGSN2 is SGSN1), the procedure proceeds to Step 12 to release the old Iu connection.
- For inter-SGSN SRNS relocation, Steps 11 and 12 are executed to release old Iu connection.

PS SRNC Relocation: Steps 11-13

- [Step 11.] SGSN2 instructs SGSN1 to release the old Iu connection by exchanging the Forward Relocation Complete and Acknowledge message pair.
- [Step 12.] SGSN1 sends the Iu Release Command message to RNC1. When the data-forwarding timer set in Step 6 expires, RNC1 returns the Iu Release Complete message to SGSN1, and the old Iu connection is released.
- [Step 13.] The RA update procedure described in Section is triggered by the MS at Step 8.